TEAR SHEET

Goodman Medium Hanging Light

Item # TOB 5091BZ-TST

Designer: Thomas O'Brien

O/A Height: 42.75"
Fixture Height: 16.75"
Min. Custom Height: 20.25"
Width: 18"
Canopy: 5" Round
Finishes: AN, BZ, BZ/HAB, HAB
Shade Treatments: AN, ASH, AW, BZ, HAB, L, NAB, TS
Shade Details: 6.5" x 18" x 16.25"
Socket: E26 Keyless
Wattage: 100 A19
Note: UL Only | Custom Height Available

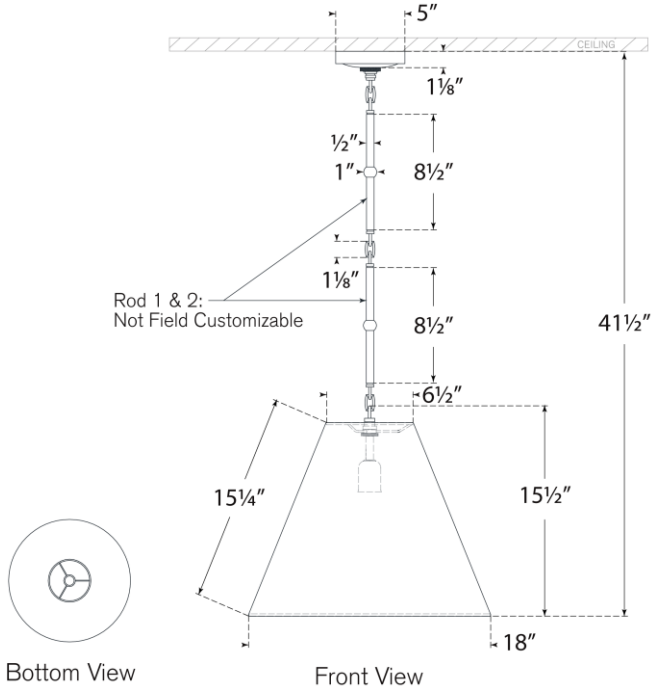

VISUAL COMFORT & CO.