ASSEMBLY INSTRUCTIONS

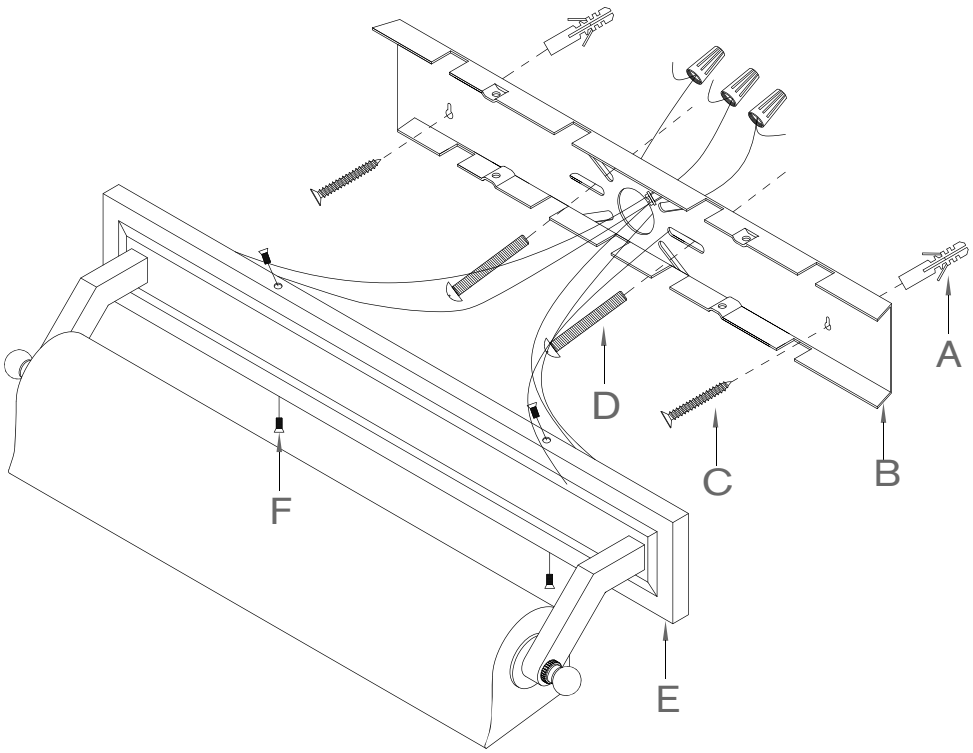

Library 22” Picture Light
Item # TOB2606

WE RECOMMEND INSTALLATION OF THIS LIGHTING FIXTURE BE DONE BY A LICENSED ELECTRICIAN.

WARNING * SWITCH OFF THE MAIN ELECTRICAL SUPPLY FROM THE MAIN FUSE BOX/CIRCUIT BREAKER BEFORE INSTALLATION.**

INSPECT ITEM CAREFULLY BEFORE ATTEMPTING TO INSTALL. IF THERE IS ANY DAMAGE OR OBVIOUS DEFECT, DO NOT INSTALL.

ITEM MAY NOT BE RETURNED ONCE IT HAS BEEN INSTALLED.

---

1. Carefully remove all parts from the carton.
2. Remove back plate (B) from base of light fixture (E) by removing base screws (F) in counter-clockwise direction.
3. Position back plate (B) horizontally on the wall outlet box. Mark center points for both key holes with a pencil. Remove back plate (B).
4. Drill small holes on each point location on the wall, each hole should be large enough to accomodate the plastic anchor (A). Push plastic anchors (A) into the holes in the wall.
5. Gently pull the wires form the wall outle and allow the wires to hang. Thread the wires through the center hole in back plate (B).
6. Attach ground (green) wire to ground wire from wall outlet box (usually green or copper in color), fasten together with a plastic wire connector. Tighten wrap the wire with electrical tape. so the end of the connector is sealed. IT IS IMPERATIVE THAT THE OUTLET BOX IN YOUR HOME BE PROPERLY GROUNDED.
7. Connect neutral (white) fixture wire coming from fixture base to neutral (usually white) outlet wire. Fasten both wires together with a plastic wire connector and tightly wrap the wire conncetor with electrical tape.
8. Repeat the procedure with the hot (black) wires. Always make sure that no wire strands are left outside the connectors. DO NOT REVERSE THE HOT AND NEUTRAL CONNECTIONS OTHERWISE SAFETY WILL BE COMPROMISED.
9. Affix back plate (B) to wall by aligning holes and secure by inserting mounting screws (D) to the holes of outlet box and screws (C) to the plastic anchors in the wall.
10. Attach fixture base (E) to back plate (B) and secure by inserting base screws (F).
11. Insert light bulbs into sockets.

*** Clean with a dry, soft cloth only. Do not use harsh abrasives or chemical agents.

Intertek DRY

VISUAL COMFORT & CO. Est. 1987