TEAR SHEET

Square Tube Single Sconce
Item # SL 2819BZ-L

Designer: Chapman & Myers

Height: 14.25"
Width: 6.25"
Extension: 7.5"
Backplate: 3.75" x 4.5" Rectangle
Finishes: AN, BZ, HAB, PN
Shade Treatments: L, NP
Shade Details: 4.5" x 6.25" x 6.25"
Socket: E12 Candelabra
Wattage: 60 B11
Weight: 2 Pounds
©EFC DESIGNS

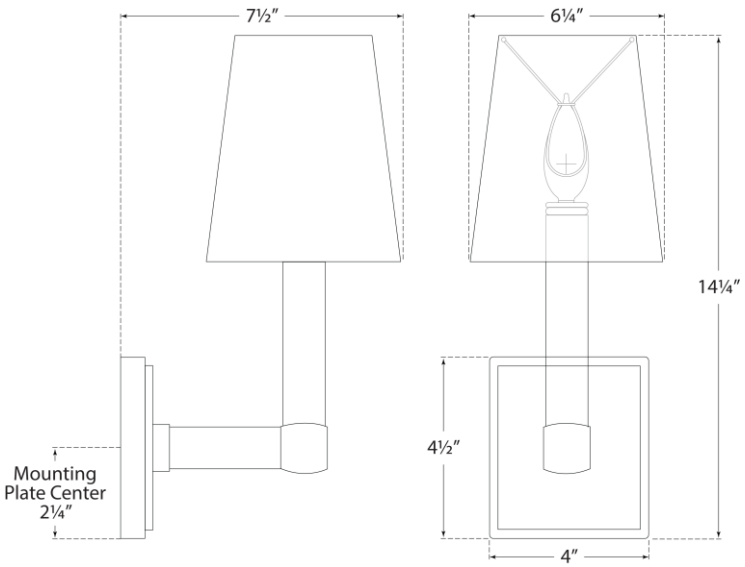

VISUAL COMFORT & CO.