TEAR SHEET

French Deco Horn Double Sconce

Item # S 2021PN-NP-EU

Designer: Visual Comfort

Height: 55.9cm
Width: 31.2cm
Extension: 15.3cm
Backplate: 8.3cm x 17.8cm Rectangle
Finishes: AN, BZ, HAB, PN
Shade Treatments: L, NP
Shade Details: 7.7cm x 12.7cm x 10.2cm
Socket: 2 - E14 Candelabra
Wattage: 2 - 40 B
IP Rating: IP20 Class I
Note: Requires Smaller Outlet Box

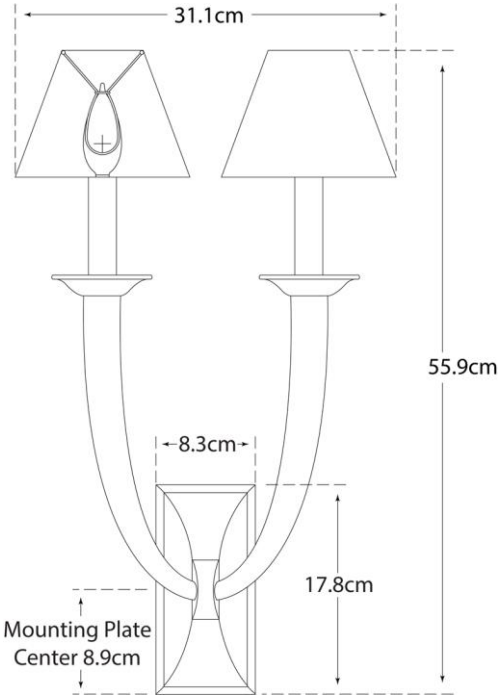

VISUAL COMFORT & CO.

CB CE