**TEAR SHEET**

**Orsay Grande Pendant**

Item # PCD 5220PN-WG-EU

Designer: Paloma Contreras

O/A Height: 148.6cm
Fixture Height: 43.8cm
Min. Custom Height: 60.3cm
Width: 76.2cm
Canopy: 21.6cm Round
Finishes: BZ, HAB, PN
Socket: E27 Keyless
Wattage: 15 LED A19
IP Rating: IP20 Class I

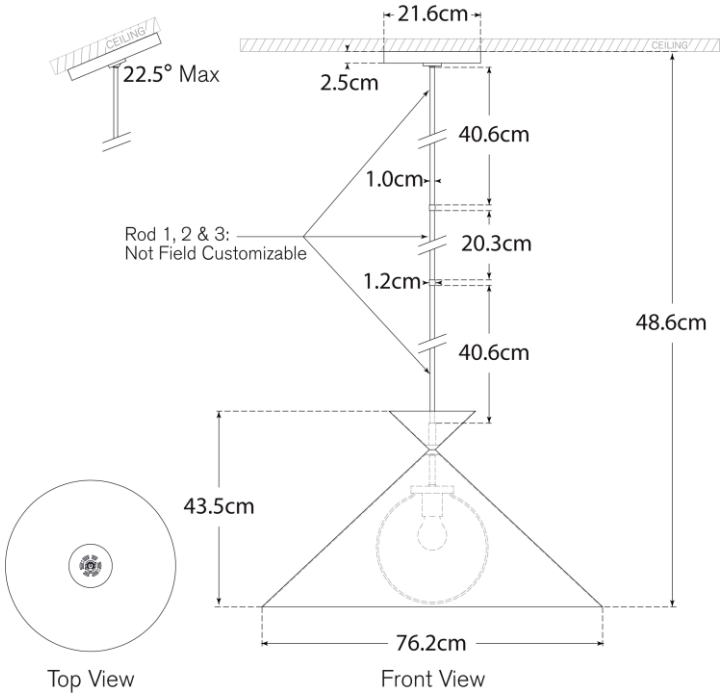


VISUAL COMFORT & CO.