TEAR SHEET

Overture Medium Uplight Chandelier
Item # PB 5041PN-CG

Designer: Peter Bristol

O/A Height: 52.75"
Fixture Height: 13.25"
Min. Custom Height: 19.5"
Width: 25.25"
Canopy: 6" Round
Finishes: PN
Glass Options: CG
Lightsource: Dedicated LED
Wattage: 18w (1500lm)
Weight: 8 Pounds
Note: Custom Height Available

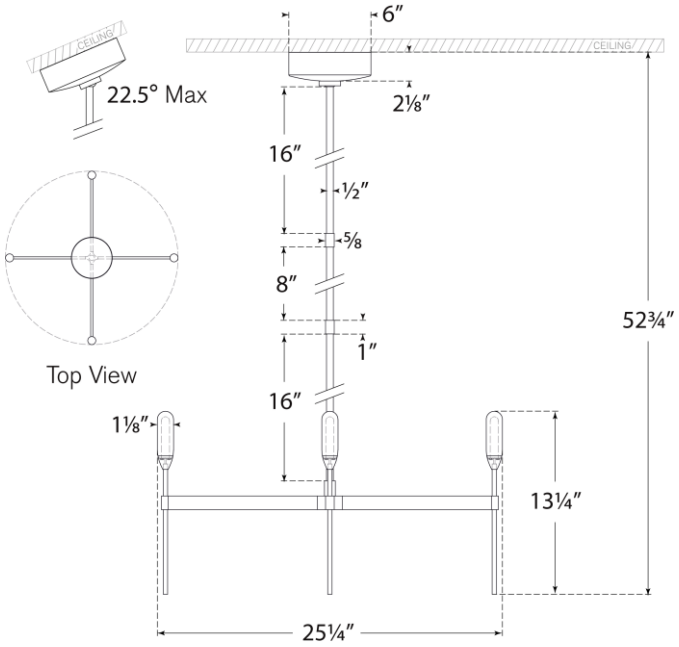

VISUAL COMFORT & CO.