TEAR SHEET

Gianna 36" Ring Chandelier

Item # JN 5037BSL-CG

Designer: Julie Neill

Height: 27.25"
Width: 36"
Canopy: 4.5" Round
Finishes: BSL, G, HAB, PN
Trim Options: CG, GF
Socket: 12 - E12 Candelabra
Wattage: 12 - 6.5 LED B11
Weight: 41 Pounds
Note: UL Only | Assembly Required

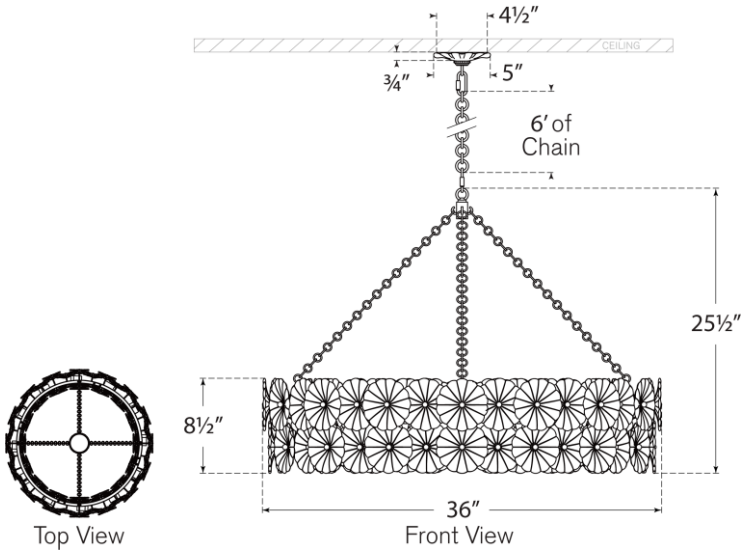

VISUAL COMFORT & CO.

DAMP LED 4