TEAR SHEET

Gianna 24" Chandelier

Item # JN 5035BSL-CG

Designer: Julie Neill

O/A Height: 60"

Fixture Height: 16.75"

Min. Custom Height: 23"

Width: 24"

Canopy: 4.5" Round

Finishes: BSL, G, HAB, PN

Trim Options: CG, GF

Socket: 12 - E12 Candelabra

Wattage: 13 - 6.5 LED B11

Weight: 25 Pounds

Note: UL Only | Custom Height Available | Assembly Required

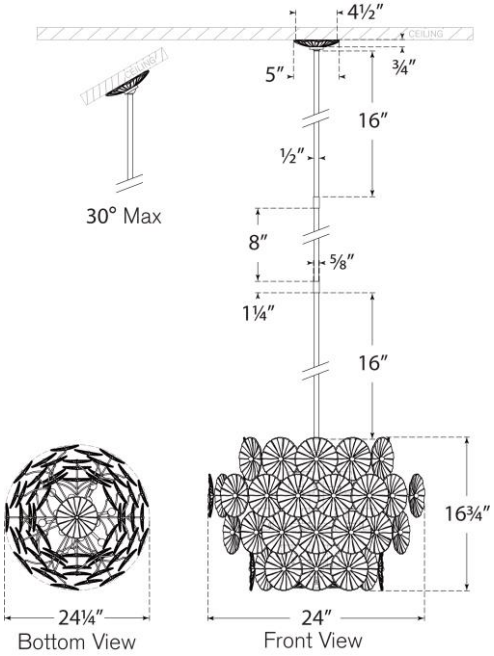

VISUAL COMFORT & CO.