TEAR SHEET

Maderno 36" Chandelier

Item # IKF 5902HAB-CG

Designer: Ian K. Fowler

O/A Height: 25" - 239"

Fixture Height: 10.25"

Width: 36.25"

Canopy: 7.25" Round

Finishes: HAB

Glass Options: CG

Lightsource: Dedicated LED

Wattage: 45w (5400lm)

Weight: 60 Pounds

Note: UL Only | Assembly Required | Height Not Adjustable After Installation

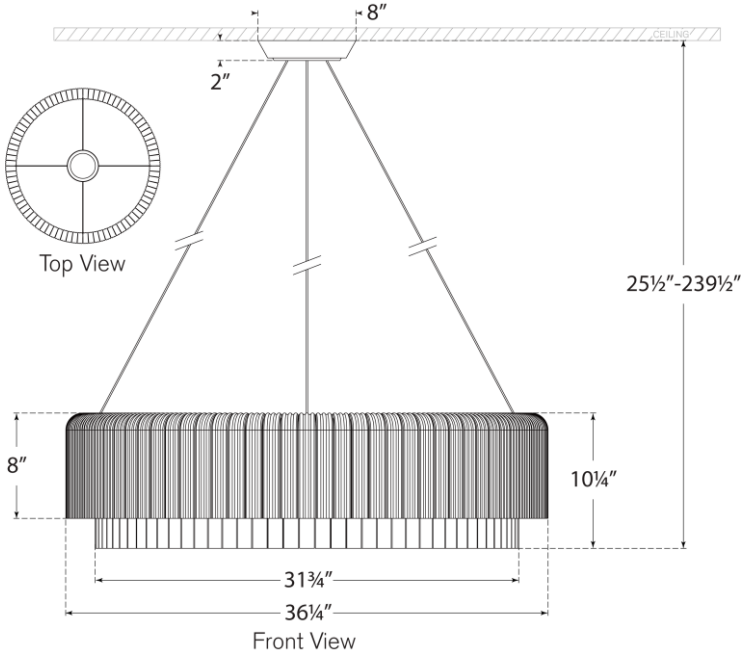

VISUAL COMFORT & CO.