TEAR SHEET

Linfort Basket Form Chandelier

Item # CHC 5271PN-CG

Designer: Chapman & Myers

Height: 36"

Width: 24"

Canopy: 5.75" Round

Finishes: PN

Trim Options: CG

Socket: 8 - E12 Candelabra

Wattage: 8 - 60 C11

Weight: 34 Pounds

©EFC DESIGNS

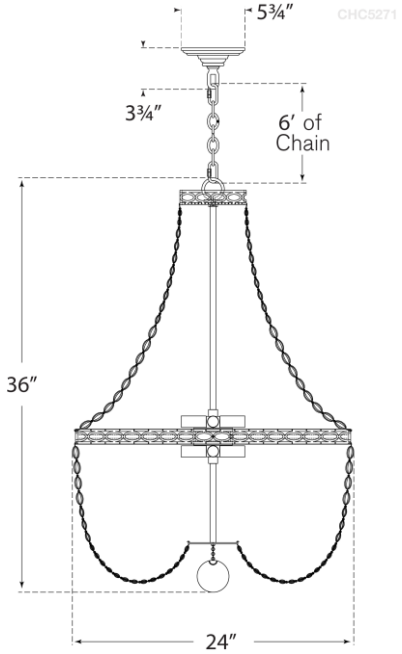

VISUAL COMFORT & CO.