TEAR SHEET

Cochere Large Lantern

Item # BBL 5106PN-EU

Designer: Barbara Barry

O/A Height: 203.2cm
Fixture Height: 112.4cm
Min. Custom Height: 132.1cm
Width: 61cm
Canopy: 13.3cm Round
Finishes: BZ, PN, SB
Glass Options: CG
Socket: 4 - E14 Candelabara
Wattage: 4 - 60 B
IP Rating: IP20 Class I
Note: Custom Height Available

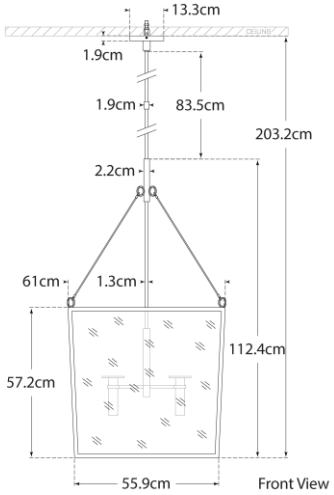

VISUAL COMFORT & CO.